Operation Manual (EN)
Translation of the german original manual

Aspiration System

Model:

► biovac 106
with 4 L Container

112037-01
2016-01-19

Gardner Denver Thomas GmbH
Am Vogelherd 20
98693 Ilmenau
Germany
T +49 3677 604 0
F +49 3677 604 131
welch-ilmvac@gardnerdenver.com
www.ilmvac.com

Customer Support +49 3677 604 0

We are constantly working on the further development of all our product types.

Reprinting or reproduction of this manual, including extracts, is not allowed without the prior written permission of Co. Gardner Denver Thomas GmbH.

All rights under the copyright laws are expressly reserved by Co. Gardner Denver Thomas GmbH.

We reserve the right to make changes and amendments.

Contents

1	**Important Information**	**4**
1.1	General information	4
1.2	Target groups	4
1.3	Intended Use	4
1.4	Use for an Unauthorized Purpose	4
1.5	Safety Devices	5
1.6	Meaning of the Warning notes	5
1.7	Product Standards, Safety Regulations	5
2	**Basic Safety Instructions**	**6**
2.1	General information	6
2.2	Electricity	6
2.3	Mechanical System	6
2.4	Hazardous Substances	7
2.5	High Temperatures	7
3	**Description**	**8**
3.1	Design	8
3.2	Function	8
3.3	Materials of the medium-affecting pump parts	9
3.4	Areas of Application	9
3.5	Possible Accessories	9
3.6	Scope of Delivery	9
3.7	handvac Handpipettor	10
4	**Technical Data**	**11**
4.1	Dimensions	11
4.2	Intake Pressure/Pumping Speed – Diagram	11
4.3	Device Data	12
5	**Installation and Operation**	**13**
5.1	Unpacking	13
5.2	Installation and Connection	13
5.2.1	Connection schematic	14
5.3	Operation	14
5.4	Storage	15
5.5	Scrap Disposal	15
6	**Maintenance and Servicing**	**16**
6.1	General Requirements	16
6.2	Maintenance Performed by the User	16
6.3	Maintenance by the Manufacturer	17
6.4	Damage Report	17
7	**Troubleshooting**	**18**
8	**Spare Parts Overview**	**19**
8.1	Spare parts view - Complete unit	19
8.1.1	Spare parts list - Complete unit	20
8.2	Spare parts view - Basic unit complete	20
8.2.1	Spare parts list - Basic unit complete	21

EC Declaration of Conformity

1 Important Information

1.1 General information

The **biovac 106 Aspiration Systems** conforms to the:

2006 / 42 / EC	Machinery Directive
2004 / 108 / EC	Electromagnetic Compatibility Directive

The CE sign is located on the rating plate. Observe the binding national and local regulations when fitting the system into installations.

Our products are sold worldwide and can therefore be equipped with the typical national plugs and for the various voltages. You will find more information about the available pump designs on our web page in the internet.

1.2 Target groups

This Operating Manual is intended for the personnel planning, operating and maintaining the biovac aspiration systems. This group of people includes:

- Designers and fitters of vacuum apparatus,
- Employees working on commercial laboratory and industrial vacuum technology applications and
- Service personnel for biovac aspiration systems.

The operating and maintaining personnel of the biovac aspiration systems must have the technical competence required to perform the work that has to be done.
The user must authorize the operating personnel to do the work that has to be done.
The personnel must have read and understood the complete Operating Manual before using the biovac aspiration systems.
The Operating Manual must be kept at the place of use and be available to the personnel when required.

1.3 Intended Use

- The layout of the biovac aspiration systems must be appropriate for the conditions of use. The user bears the sole responsibility for this.
- The biovac aspiration systems may only be operated under the conditions stated
  - in the "Technical Data" section,
  - on the rating plate, and
  - in the technical specification for the order concerned.
- The biovac aspiration systems have an integrated, highly chemical-resistant diaphragm pump. It is used in chemical and biological applications to extract non-explosive liquid residues safely and precisely.

1.4 Use for an Unauthorized Purpose

It is forbidden to use the pump for applications deviating from the technical data stated on the type plate or the conditions stated in the supply contract, or to operate it with missing or defective protective devices.

1.5 Safety Devices

Measures such as the following are for the safety of the operating personnel:

- operating mode S1 (with grounding connector)
- integrated fuse in the vacuum pump
- closed housing
- intact collecting tank
- insertion of a particle filter suitable for the work task

1.6 Meaning of the Warning notes

Take note of the warning notes. They are in the following box:

	CAUTION / WARNING !
Hazard which may lead to serious injuries or material damage.	

1.7 Product Standards, Safety Regulations

The biovac 106 Aspiration Systems fulfils the following product standards:

DIN EN ISO 12100-2010	Safety of machinery - General principles for design - Risk assessment and risk reduction
DIN EN ISO 13857:2008-06	Safety of machinery - Safety distances to prevent hazard zones being reached by upper and lower limbs
DIN EN 1012-2	Compressors and vacuum pumps - Safety requirements - Part 2: Vacuum pumps
DIN EN ISO 2151	Acoustics - Noise test code for compressors and vacuum pumps - Engineering method (grade 2)
DIN EN 60204-1	Safety of machinery - Electrical equipment of machines - Part 1: General requirements
DIN EN 61000-6-2 **DIN EN 61000-6-4**	Electromagnetic compatibility (EMC) - Part 6-2: Generic standards - Immunity for industrial environments Part 6-4: Generic standards - Emission standard for industrial environments
DIN EN 61010-1	Safety requirements for electrical equipment for measurement, control and laboratory use - Part 1: General requirements
DIN EN 50110-1	Operation of electrical installations
Directive 2012/19/EC	Electrical and electronics - old devices (WEEE)
Directive 2011/65/EC	Dangerous materials in electrical and electronics devices (RoHS)
China - RoHS	Environment protection law - China 2007-03

The following additional safety regulations apply in the FR Germany:

BGV A3	Electrical equipment and operating materials
VBG 5	Power-driven machines
BGR 120	Guidelines for laboratories
BGI 798	Hazard assessment in the laboratory
BGG 919 (VBG 16)	Accident prevention regulations for "compressors"
BGR 189 (BGR 195;192;197)	Use of protective working clothes

Observe the standards and regulations applying in your country when you use the aspiration systems.

2 Basic Safety Instructions

2.1 General information

	WARNING !
Warning notices must be observed. Disregarding them may lead to damage to health and property.	

The **biovac 106 Aspiration Systems** must be operated by personnel who can detect impending dangers and take action to prevent them from materialising.

The manufacturer or authorized workshops will only service or maintain the aspiration systems if it is accompanied by a fully completed damage report. Precise information about the contamination (also negative information if necessary) and thorough cleaning of the system are legally binding parts of the contract.

Contaminated aspiration systems and their individual parts must be disposed of in accordance with the legal regulations.

The local regulations apply in foreign countries.

2.2 Electricity

The **biovac 106 Aspiration Systems** are supplied for operating mode S1. Please note that the testing must be repeated in accordance with DIN EN 0105, DIN EN 0702 and BGV A2 in case of portable devices.

The local regulations apply in foreign countries.

Please note the following when connecting to the electrical power supply system:

- The electrical power supply system must have a protective connector according to DIN VDE 0100-410 (IEC 60364-4-41).
- The protective connector must not have any breaks.
- The connecting cable must not be damaged.

2.3 Mechanical System

Improper use can lead to injuries or material damage. Observe the following instructions:

- Only operate the biovac aspiration systems with hoses of the specified dimensions.
- Solid particles in the pumping medium impair the pumping action and can lead to damage. Prevent their penetrating into the pump.
- Hazardous substances must be separated out as far as this is technically possible before they reach the pump.
- External mechanical stresses and vibrations must not be transmitted to the system. Only use a flexible laboratory hose for connecting the aspiration system.
- The overpressure generated at the pressure port must not exceed 1 bar.
- The pump must not be used to pump liquids.
- Set the biovac aspiration systems on a flat and horizontal surface.
- Do not close the space beyond the bottom of the device in order to enable the pump to cool.

2.4 Hazardous Substances

The responsibility for using the biovac aspiration systems rests with the operator.

Hazardous substances in the gases to be pumped can cause personal injuries and property damage. Pay attention to the warning notices for handling hazardous substances.

The local regulations apply in foreign countries.

Explosive gases

The aspiration system is not certified according to ATEX guidelines 94/9/EC.

The system operator is obliged to comply with the ATEX 137 guidelines 99/92/EC when using the pump within and for danger areas.

Aggressive gases

An MP series diaphragm pump is used for extracting vapours and aggressive gases.

The warranty shall lapse if the biovac aspiration systems are used with diaphragm pumps from other manufacturers.

Poisonous gases

Use a suitable separator when pumping poisonous or harmful gases. Prevent such substances from leaking out of the appliance or pump. Treat these substances according to the applicable environmental protection regulations.

The diaphragm pump, control valves and hose lines can be damaged by poisonous or aggressive gases.

Test the strength and leak-tightness of the connecting lines and the connected apparatus. Prevent environmental poisons, e.g. mercury, getting into the diaphragm pumps.

Fulfil the requirements, for example:

- German Hazardous Substances Regulation (GefStoffV) of 01. December 2010
- Regulations 2006/121/EC (classification, packaging and identification of hazardous substances),
- Manufacturer's safety data sheets on hazardous substances.

2.5 High Temperatures

The diaphragm pump may heat up as a result of the temperature of the gas being pumped and through compression heat.

Prevent the following maximum permissible temperatures from being exceeded.

- + 40 ℃ for the environment and
- + 40 ℃ for the medium to be pumped.

The motor for single phase alternating current is protected against overload by a fine-wire fuse and integrated motor-protective switch.

3 Description

3.1 Design

Between secretion container **(3)** and membrane pump **(8)** is an inline filter hydrophobic **(5)** with a pore size of 0.22 microns to protect the membrane pump against pollution caused by fine solid particles and aerosols. A quick coupling **(4)** is used for the connection to the diaphragm pump **(8)**. It is provided with a stop valve.
A partially chemical-resistant diaphragm pump **(8),** a pressure gauge **(6)** and a regulator **(7)** are used.
The cap of the secretion container **(3)** consists of a plastic cap with a seal **(2)**. Secretion container **(1)** and handvac **(8)** are connecting with a hose **(1)**.
After disconnecting the unions, the two flexible tube ends **(1)** at the secretion container **(3)** may be connected to one another to ensure safe transport.

The Aspiration System is switched on and off directly at the device switches **(9)** or the optionally available foot push-button and/or foot switch *(see accessories).*

The user appropriate pipette tips *(see also chapter 3.7)* can be used in the respective adapter of the handvac **(10)** with single-channel plastic adapter **(11)** and/or eight-channel plastic adapter **(12)**.
All hoses **(1)** located outside of the Aspiration System are made of silicone.

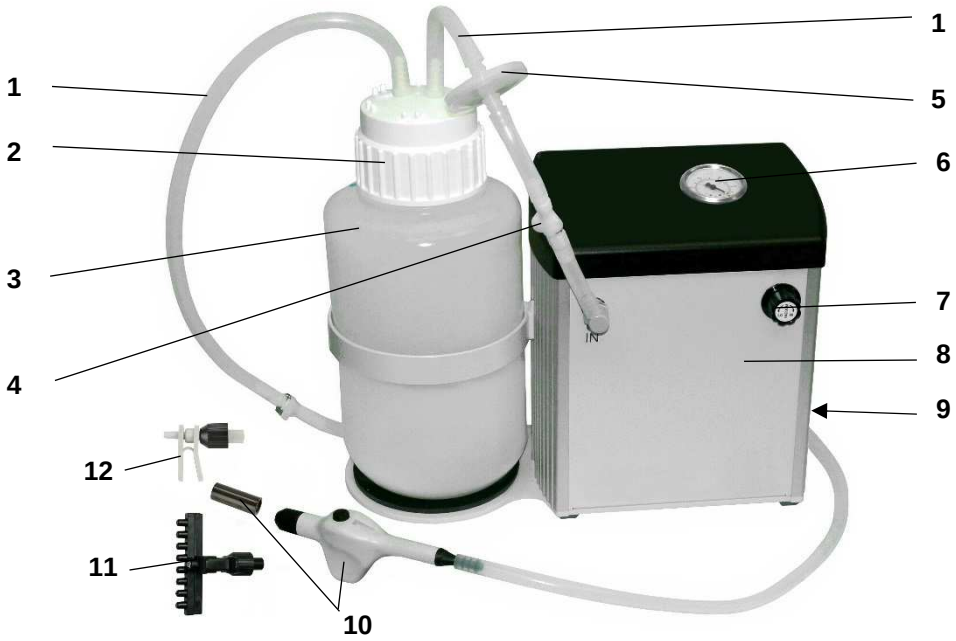

Fig. 1 Design - Aspiration-System

3.2 Function

The Aspiration System with an integrated partially chemical-resistant built-in diaphragm pump is used for the safe and precise aspiration of non-flammable chemical and biological liquids.
The pressure, which is shown on the pressure gauge, may be preset with the regulator.
The fluids can be removed easily and very precisely from slides, Petri dishes, cell culture containers etc., by using different pipettes or glass tips which are inserted into the ***handvac***.
The integrated secretion container has a built-in float valve. This valve shuts the suction line automatically as soon as the maximum fill level is reached.
A hydrophobic inline filter with a suitable filtration grade is inserted in order to provide additional safety.

3.3 Materials of the medium-affecting pump parts

Component	Materials
Seal	EPDM
Hose nozzle / Connecting element	PP
Valve	FKM
Diaphragm	PTFE layer foil
Hose / Separator	PVC
Connection head / Pump head	Ryton

3.4 Areas of Application

The biovac 106 Aspiration System is intended for:

- the safe and precise extraction and catching of liquid and non-explosive excess fluids
- use in the chemical, biological and medical areas
- generating a vacuum down to an ultimate pressure < 100 mbar

3.5 Possible Accessories

Figure	Designation	Order no.
	On/Off - Foot push-button	**112529**
	On/Off - Foot switch	**112529-01**
	Inlinefilter (hydrophobic), pore size 0.22 microns *10 Pieces/Pack*	**112555-04**
	handvac *double* - *handvac* Handpipettor with rubber adapter - Silicone hose 2m, inside ø 4 x 1,5 mm - Y-Connector PP, for hose NW 8 - Single Channel Plastic Adapter for tip with ejector - Coupling with hose connector for silicone hose	**112580-02**
	Eight-Channel Stainless Steel Adapter	**828852-03**
	handvac Stand	**828852-02**
	Silicone hose, Inside ø 4 x 1.5 mm *sold by the meter*	**828357**

3.6 Scope of Delivery

The scope of delivery is specified in the supply contract.

3.7 handvac Handpipettor

The ***handvac*** is factory pre-set to allow a low level of constant suction.

	handvac *basic* *consisting of:* - *handvac* Handpipettor with rubber adapter - Silicone hose 2 m, inside ø 4x1.5 mm - Single Channel Plastic Adapter for tip with Ejector - Coupling with hose connector for silicone hose
	Eight-Channel Plastic Adapter with Ejector

3.7.1 Operation

1. Slide the flexible tube over the hose nozzle **(B)** of the handvac.
2. Remove the bayonet socket from the adapter port **(A)** Insert a one-channel or eight-channel plastic adapter with a rubber adapter into the base and close the bayonet socket.
3. Press the button **(C)** when overpressure is applied. The valve **(E)** is opened and the fluid may be extracted using a pipetting tip. The suction capacity may be controlled using the button **(C)**.
4. Turn the screw **(D)** to adapt the suction capacity. Turn right to close the valve **(E)**. Turn left to set a constant suction capacity.

3.7.2 Cleaning and Service

- The ***handvac*** is fully autoclavable.
- Clean by immersing all pieces in a solution of water and mild laboratory detergent. Do not use abrasives, as this may affect operation of the control valve. Rinse with distilled water.
- Apply a thin coat of lubricant (in the scope of delivery) as needed to the control valve **(E)**.

3.7.3 Special Care Instructions

Autoclave the unit prior to disassembly, *see fig. at right.*	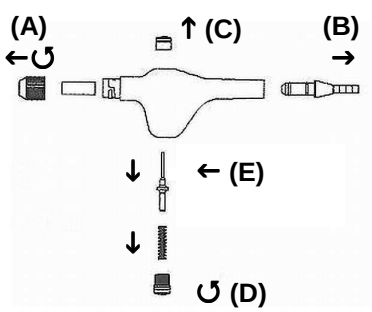
Immediately flush the ***handvac*** with ethanol after working with organic solvents.	
To avoid build-up of deposits, immediately flush the ***handvac*** with salt-rich solutions.	
For seals replacement, use silicone - O-Rings only.	

4 Technical Data

4.1 Dimensions

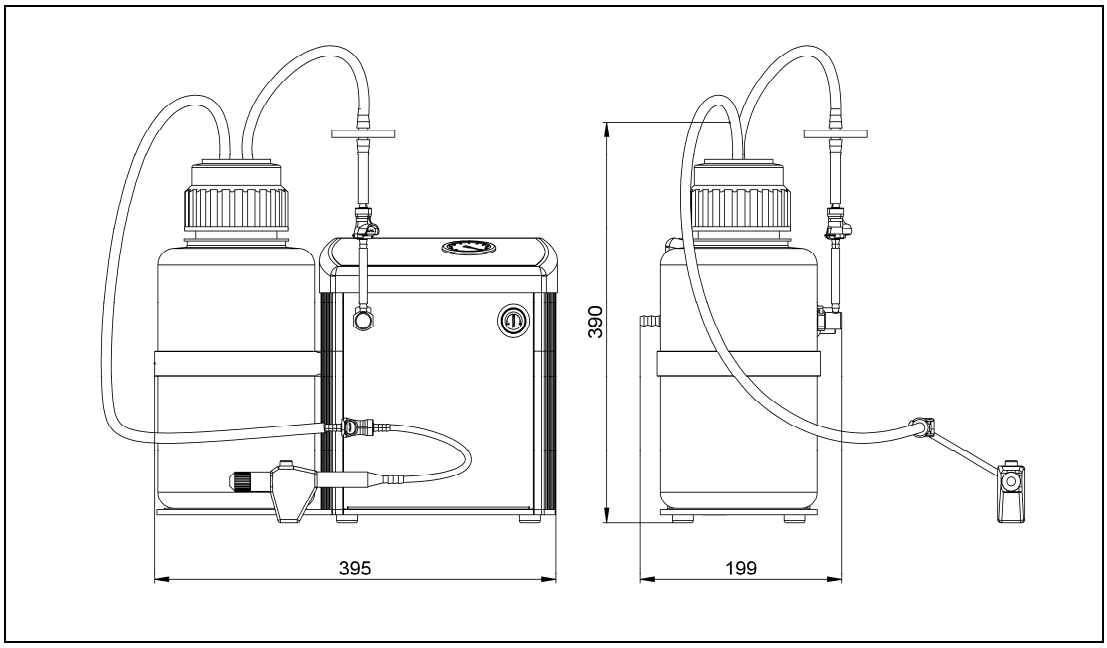

Fig. 2 Dimensions

4.2 Intake Pressure/Pumping Speed – Diagram

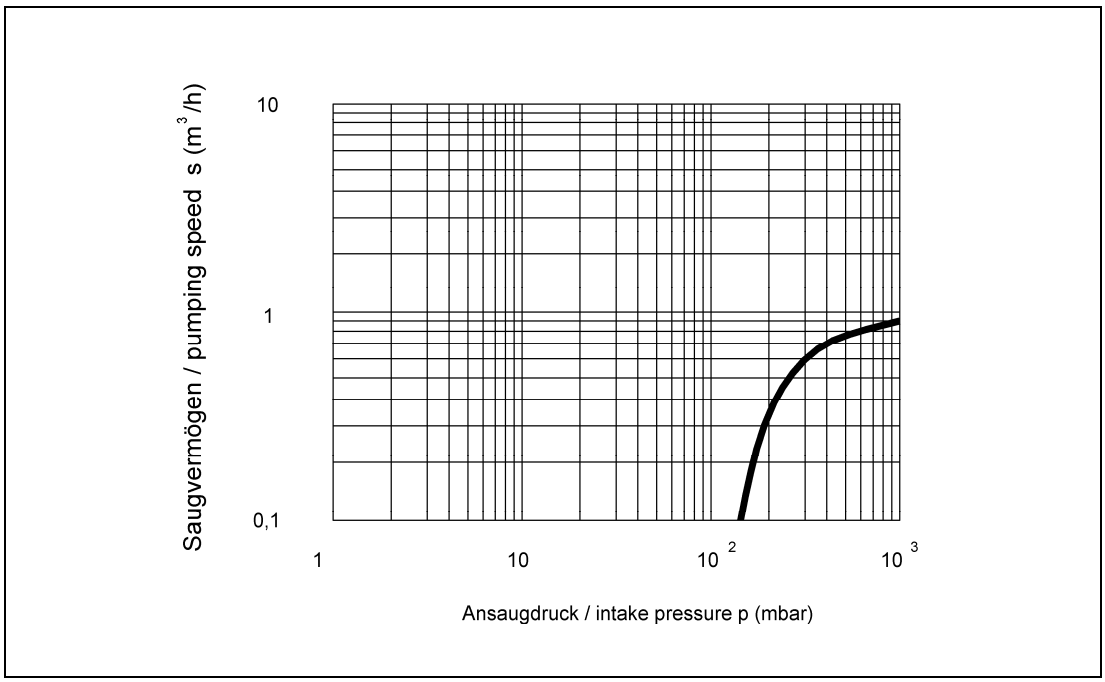

Fig. 3 Intake pressure pumping speed

4.3 Device Data

Parameter	Unit	Data
Pumping speed DIN 28432 with speed of 1500 rpm	m^3/h	0.9
	l/min	15
Ultimate pressure	mbar	< 150
Maximum inlet - / outlet pressure	bar	1
Intake connection	-	handvac (Pipettor)
Exhaust connection		Hose nozzle DN 8 for hose inside diameter 8 mm
Secretion container	-	4 litres, PP
Ambient temperature	℃	+ 15 to + 40
Maximum Medium temperature		+ 40
Reference surface sound pressure level DIN EN ISO 2151	dB (A)	< 45
Voltage	V DC	24
Fine fuse	A	F 3.15
Operating mode	-	S 2
Type of protection DIN EN 60529		IP 44
Motor - Class of insulation DIN EN 600034-1		DC
Dimensions (W/D/H) *(without hose)*	mm	395 / 199 / 390
Weight	kg	8.0
Aspiration System *inclusive mains connection cable IEC with plugs CEE, UK, US*	-	112037-01

The information presented in this material is based on technical data and test results of nominal units. It is believed to be accurate and reliable and is offered as and aid to help in the selection of products.
It is the responsibility of the user to determine the suitability of the product for the intended use and the user assumes all risk and liability whatsoever in connection therewith. Gardner Denver Thomas GmbH does not warrant, guarantee or assume any obligation or liability in connection with this information.

5 Installation and Operation

5.1 Unpacking

Carefully unpack the **biovac 106 Aspiration System**.

Check for:

- Transport damage,
- Conformity with the specifications of the supply contract (type, electrical supply data),
- Completeness of the delivery.

Please inform us without delay if there are discrepancies between the delivery and the contractually agreed scope of delivery, or if damage is detected.
Please take note of the general terms of business of the manufacturing firm.
In case of a claim under warranty, the device must be returned in packaging that is suitable for protecting it during transport.

5.2 Installation and Connection

Procedure: *(see also chapter 5.2.1)*	
1.	Set the aspiration system on a flat and horizontal surface.
2.	Connect the ***handvac*** **(A1)** to the suction line **(A2)**. *(handvac, see also chapter 3.7)*
3.	Connect the exhaust pipe to the building ventilation system **(B)**.
4.	If required, connect the foot switch *(accessories optional)* to the socket **(C)** provided on the unit.
5.	Set the mode selector switch **(D)** to "Hand" or "Foot". *(see chapter 3.5)*
6.	Connect the system to the power supply **(E)**.
7.	Switch on the unit's main switch **Power (F)**.

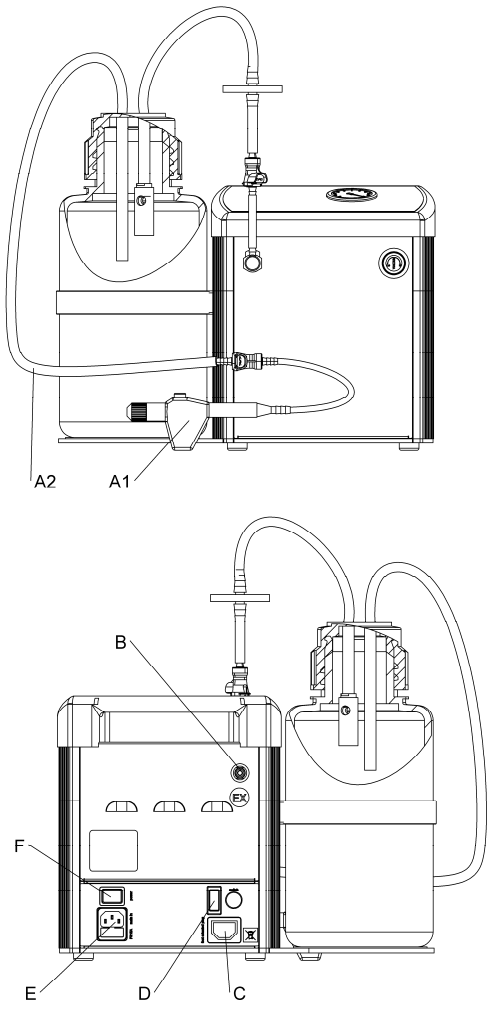

Fig. 4 Connections
(Container: in partly sectional illustration)

5.2.1 Connection schematic

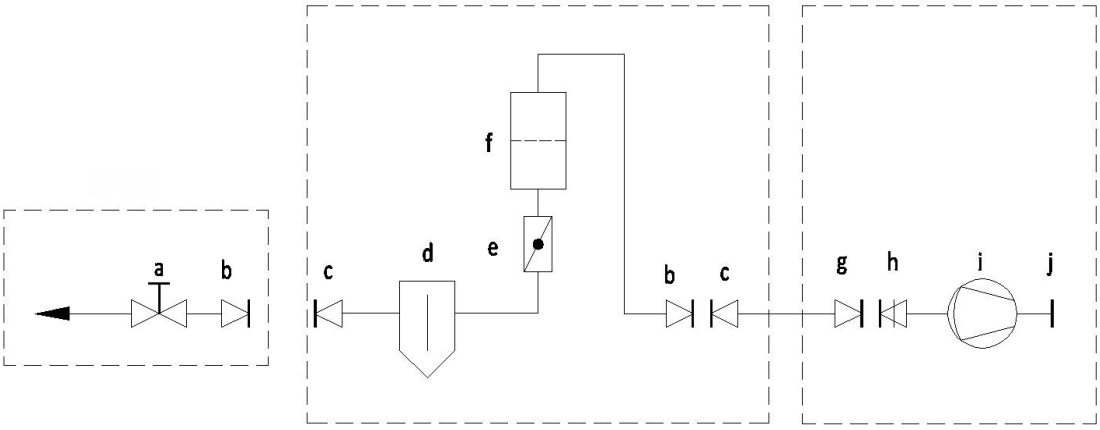

handvac *basic* Order no. 112580-01		**Secretion PP - Container 4 Litres** Order no. 112523-8		**Basic unit** Order no. 112584	
a	**handvac** for aspiration into the container	**c**	**Coupling plug**	**g**	**Elbow plug with valve**
		d	**Separator**	**h**	**Connecting coupling** of the pump
		e	**Float valve**		
b	**Coupling**	**f**	**Inline filter 0.22 µm** (hydrophobic)	**i**	**Diaphragm pump**
-	-	**b**	**Coupling**	**j**	**Exhaust connection** Hose nozzle DN 8
		c	**Coupling plug**		

Fig. 5 Connection schematic

5.3 Operation

	CAUTION!
Observe the basic safety instructions when using the aspiration systems!	

Procedure:

1. The biovac aspiration systems is switched on and off at the operating switch (illuminated rocker switch).
2. Set mode selector switch to ***"Hand"***.
3. For operation using the optional foot switch, set the selector switch to the ***"Foot"*** position and actuate that switch.
4. A low air pressure is generated in the reservoir.
5. Press the black button at the top side of the ***handvac*** to suck the fluid into the reservoir.
6. A regulator screw is located at the bottom side of the ***handvac***. It is used to set the extraction speed.
7. For the safety of the user, a ∅ 55 mm PTFE filter (if necessary hydrophobic) suitable for the requirements and work task must be to use.

5.4 Storage

The pumps are to be stored in a low-dust, interior room within the temperature range from + 5 to + 40 ℃ and at a relative air humidity < 90% .

Leave the protective elements on the intake and pressure ports. Another equally good protection may be used.

5.5 Scrap Disposal

CAUTION !

The aspiration systems must be disposed of in accordance with the 2012/19/EC guideline and the specific national regulations.

Contaminated systems must be decontaminated according to the laws.

The user is responsible for disposing of the products extracted and decontaminating the secretion container and hoses.

Secretion container and container cover are autoclavable. Against hoses and pipettes are expendable materials.

A contaminating of the diaphragm pump is to be avoided by use of a suitable filter.

6 Maintenance and Servicing

6.1 General Requirements

Repairs of the Aspiration System may only be performed by the manufacturer or authorized workshops. The prerequisites are a complete and factually correct damage report, and a clean and, if necessary, a decontaminate device.
Send in defective devices for repair either to the manufacturer or to an authorized workshop. The information about the contamination or thorough cleaning is legally binding parts of the contract.

6.2 Maintenance Performed by the User

WARNING !

Only perform the work that is described here, and that which is permitted to be done by the user.
All other maintenance and service work may only be performed by the manufacturer or a dealer authorized by him.
Beware of the pump parts being possibly contamination by hazardous substances.
Wear protective clothing if there is contamination.

The operator may perform maintenance work to the extent indicated below:

- Check the device daily for unusual running noises and heat building up on the surface of the device.
- Check the electrical and vacuum connections regularly.
- Empty the secretion container in a timely manner.
  (Observe all disposal specifications as applicable to hazardous substances!)
- Check screw connections for tightness and tightened when necessary.
- Check vacuum hoses for leaks and, if necessary, replace them.
- Check the secretion container for leaks and change if necessary.
- Exchange the inline filter at regular, defined intervals.
- Test performance of the quick-fitting couplings with shut-off valves.

WARNING !

When repairing contaminated units, be sure to observe the applicable user specifications regarding decontamination as required.
Provide full information about the type of contamination and the used materials and clean the pump thoroughly before handing it over to third parties.

6.3 Maintenance by the Manufacturer

Repairs and maintenance going beyond the extent of the work described *in chapter 6.2* or reconditioning or modification may only be performed by the manufacturer or authorized workshops.

	CAUTION !
The user shall be liable for the consequences of an incorrect damage report or a contaminated pump. The statements in the damage report are legally binding.	

6.4 Damage Report

You find the form of the damage report to the Download on our web page in the menu "service" and "Downloads". www.ilmvac.com

If you should not have an entrance to the Internet, you can request the form also gladly with us, under phone +49 3677 604 0.

	WARNING !
Incomplete or incorrectly completed damage reports may endanger the service personnel! **Give full information in the damage report, in particular regarding a possible contaminating.**	

7 Troubleshooting

Only manufacturing firm and authorized service workshops may work in the biovac 106 Aspiration System and accessory components during the warranty period.

Trouble	Cause	Remedy	
		by:	***with:***
Built-in diaphragm pump does not start	No power supply	***Qualified electrician***	Check electrical installation
Built-in diaphragm pump does not generate a vacuum or only an inadequate one	Connected apparatus and/or connecting elements leaking	***User or Service workshop***	Check hose connections, identify the leak and seal it Exchange hoses, seals and / or screw connections, if necessary
	Built-in diaphragm pump dirty or defective		General maintenance / leaning Exchange Built-in diaphragm pump
Running noise	Built-in diaphragm pump dirty		
Inline filter	used and/or dirty	***User***	Exchange
Secretion container	dirty or leaky		Cleaning or exchange
Cable(s)	defective and/or brittle	***Qualified electrician***	Exchange of the cable(s)

8 Spare Parts Overview

The spare parts list contains all the spare parts and all the information necessary for ordering.
When ordering, please quote the description, quantity, serial number and order number!

	CAUTION !
We are not liable for any damage caused by the installation of any parts not supplied by the manufacturer.	

8.1 Spare parts view - Complete unit

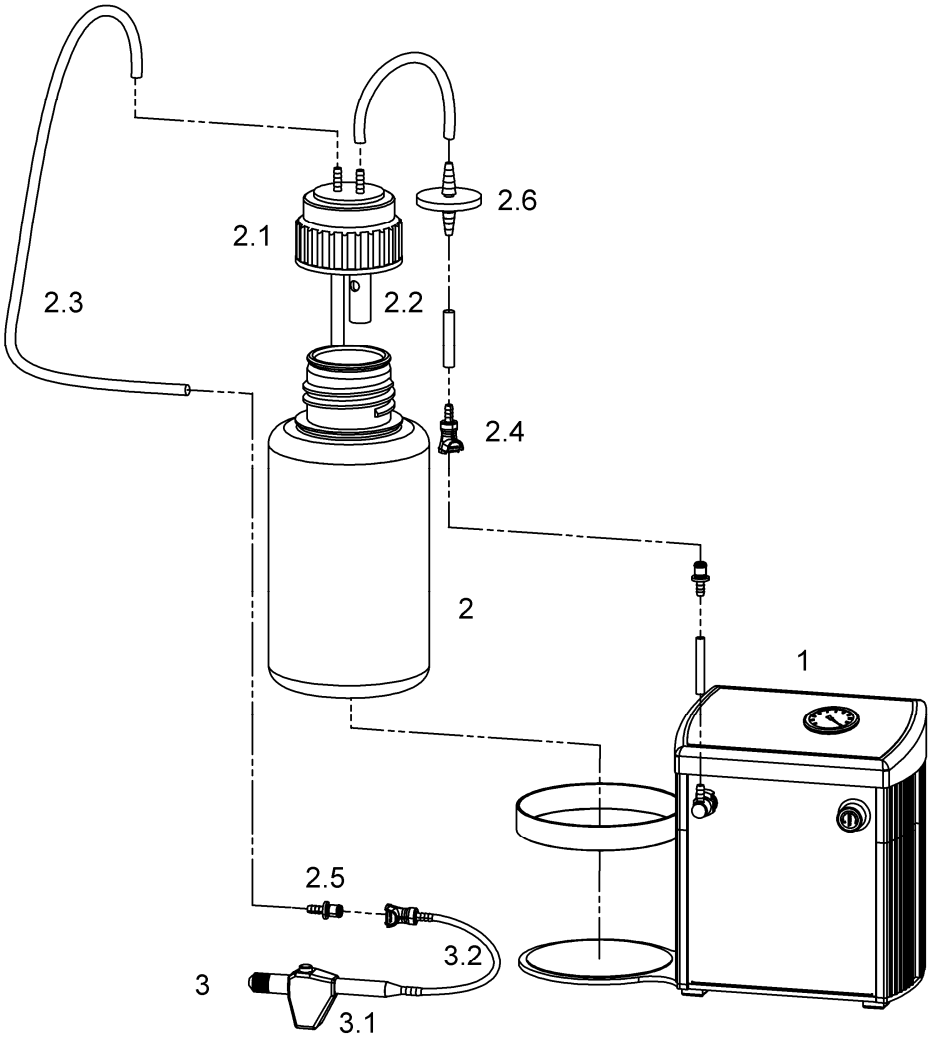

Fig. 6 Explosion view – complete unit

8.1.1 Spare parts list - Complete unit

Pos.	Designation	Piece	Order no.
1	**Basic unit complete** *(spare parts see chapter 8.2)*	**1**	**112579**
2	**Secretion PP - container complete, 4 litres** *(consisting of position: 2.1 – 2.6)*	**1**	**112523-8**
2.1	- Secretion PP – container 4 litres, cover with 2 connections	1	828853
2.2	- Float valve *(in the cover)*	1	112581
2.3	- Silicone hose (inside Ø 6 mm x wall thickness 3 mm)	1,02 m	828374
2.4	- Coupling plug + hose connector f. hose inside Ø 6.4 mm	1	829157-1
2.5	- Coupling + hose connector for hose inside Ø 6.4 mm	1	829157-20
2.6	- Inline filter (hydrophobic) 0,22 µm	1	112555-04
3	**handvac *basic*** *(consisting of position: 3.1 – 3.3)*	**1**	**112580-01**
3.1	- handvac Handpipettor with rubber adapter	1	828852-01
3.2	- Silicone hose (inside Ø 6 mm x wall thickness 3 mm)	1	H100087
	- Coupling + hose connector for silicone hose	1	829157-20
3.3	- Single Channel plastic Adapter	1	828852-05
4	**Eight-Channel Plastic Adapter with Ejector**	**1**	**828852-04**
-	**Mains connection cable IEC with plug CEE (D)**	**1**	**825885**
	Mains connection cable IEC with plug BS (UK)	**1**	**825878**
	Mains connection cable IEC with plug NEMA 1-15 (US)	**1**	**825903**

8.2 Spare parts view - Basic unit complete

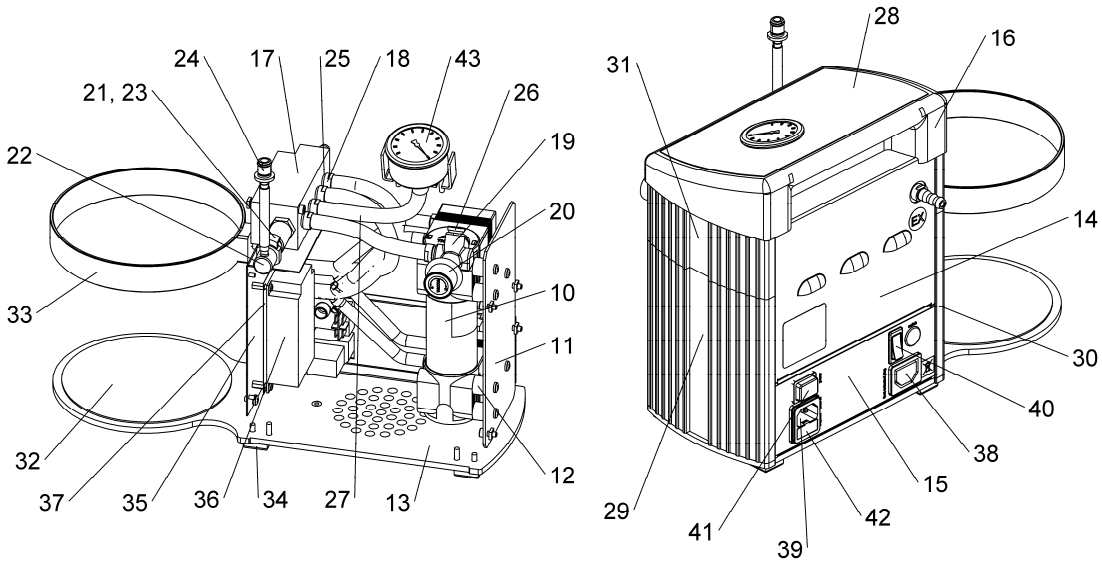

Fig. 7 Explosion view – Basic unit complete

8.2.1 Spare parts list - Basic unit complete

Pos.	Designation	Piece	Order no.
-	**Basic unit complete** *(consisting of position: 10 – 43)*	**1**	**112584**
10	Built-in Diaphragm pump 7006	1	827730
11	Pump carrier	1	112579-01
12	Rubber metal-pad	6	829121
13	Foot plate	1	112567-01
14	Casing	1	112579-02
15	Switch panel	1	112568-01
16	Casing cover	1	112579-03
17	Manifold block	1	112579-04
18	Hose nozzle PP, G 1/8“	6	710797
19	Regulator, Basic body	1	U669208
20	Regulator, Rotary uppers	1	U641230
21	Quick release coupling PP, NW 7.2 mm - ¼“	1	829996-2
22	Angle with hose connector PP, NW 7.2 mm – inside Ø 6.4 mm	1	829996-1
23	O-Ring Ø 12 x 2	1	829217-3
24	Coupling plug + hose connector for hose inside Ø 6.4 mm	1	829157-1
25	O-Ring Ø 8 x 2	8	829210-3
26	Plug screw G1/8“ galvanized	2	824107
27	Silicone hose (inside Ø 6 mm x wall thickness 3 mm)	0.7 m	828374
28	Front foil	1	828906-10
29	Aluminium profile 155	1	400979
30	Aluminium profile 155	1	400979-05
31	Aluminium profile 60	2	400979-06
32	Rubber plate	1	112547-04
33	Guard ring for bottle	1	112561-11
34	Casing foot	5	829112
35	Adapter plate	1	400949-01
36	Power pack 24VDC / 4.2A	1	827397-02
37	Insulating plate	1	113526-01
38	Socket for non-heating apparatus	1	825274-7
39	Combination connector	1	825274-9
40	Rocker switch 16 (1) A green, 2-pole	1	825186-1
41	Rocker switch 4 (1) A green, 2-pole	1	825186-3
42	Fine-wire fuse F 3.15 A	1	825391-1
43	Bourdon-Manometer G1/8“	1	827409-8

EG - Konformitätserklärung

EC Declaration of Conformity / *CE Déclaration de Conformité*

DIN EN ISO / IEC 17050

(de) **Hiermit erklären wir**	WELCH by Gardner Denver	**Gardner Denver Thomas GmbH** Am Vogelherd 20 98693 Ilmenau Germany	T +49 3677 604 0 F +49 3677 604 131 welch-ilmvac@gardnerdenver.com www.ilmvac.com

unter eigener Verantwortung, dass nachstehendes Produkt aufgrund seiner Konzipierung und Bauart sowie in den von uns in Verkehr gebrachten Unterlagen den nachfolgend aufgeführten EG-Richtlinien und Normen entspricht.
Bei einer nicht mit uns abgestimmten Änderung des Produkts verliert diese Erklärung ihre Gültigkeit.

(en) We (Gardner Denver Thomas GmbH) herewith declare under our sole responsibility that the product described below is in accordance with the following Directives standards and other technical specifications regarding design and version when delivered from our factory.
This declaration becomes invalid whenever the product has been modified without our consent.

(fr) *Nous (Gardner Denver Thomas GmbH) certifions par la présente, que le produit décrit ci-après est conforme, tant dans sa conception que dans sa réalisation, aux normes de sécurité et d'hygiène exigées par les standards de la CE.*
En cas de modification du produit sans notre accord, cette déclaration devient caduque.

Bezeichnung des Produkts (Pumpen / Pumpstände) Description of product (pumps / pump systems) *Description du produit (pompes / pompe systèmes)*	**Absaugsystem** / Aspiration System / *Système d'aspiration* **biovac 106**
Artikel-Nr. / Fabrication No. / *No. de fabrication*	112037-01
Baujahr / Year of manufacture / *Annee de fabrication*	**2016**

Das Produkt entspricht folgenden Richtlinien und Normen: / The product is in conformity with the following Directives and standards: / *Le produit est conforme aux directives et standards suivants:*

X	**2006/42/EG**	**Maschinenrichtlinie** / EC machinery directive / *directive CE sur les machines* (17.05.2006)
	94/9/EG	**ATEX-Richtlinie für Verwendungen in explosionsgefährdeten Bereichen, Anhang III** / ATEX Guideline for use in potentially explosive atmospheres, Appendix III / *ATEX Directive for applications in hazardous areas, Annex III*
X	**2004/108/EG**	**Elektromagnetische Verträglichkeit** / EC Electromagnetic Compatibility Directive / *Directive CE relative à la compatibilité électromagnétique* (15.12.2004)
X	**2011/65/EU**	**Gefährliche Stoffe in Elektro- und Elektronikgeräten (RoHS) /** Dangerous materials in electrical and electronics devices (RoHS) / *Substances dangereuses dans les appareils électriques et électroniques (RoHS)*
X	**2012/19/EU**	**Elektro- und Elektronik - Altgeräte (WEEE)** / Electrical and electronics - old devices (WEEE) / *Électro et électronique - appareils de contralto (WEEE)*
X	**China – RoHS**	**Umweltschutzgesetz** – China 2007-03 / Environment protection law / *Loi sur la protection de environnement*

Angewandte harmonisierte Normen: / Applied harmonized standards: / *Standards appliques et harmonises:*

	DIN EN 1127-1:2011-10	**Explosionsfähige Atmosphären – Explosionsschutz - Teil 1: Grundlagen und Methodik** / Explosive atmospheres - Explosion prevention and protection - part 1: Basic concepts and methodology / *Atmosphères explosives - Protection contre les explosions - partie 1 : prescriptions et méthodologie*
	DIN EN 13463-1:2009-07	**Nicht-elektrische Geräte für den Einsatz in explosionsgefährdeten Bereichen - Teil 1: Grundlagen und Anforderungen /** Non-electrical equipment for use in potentially explosive atmospheres - part 1: Basic method and requirements */ Appareils non électriques destinés à être utilisés en atmosphères explosibles - partie 1 : prescriptions et méthodologie*
	DIN EN 13463-5:2011-10	**Nicht-elektrische Geräte für den Einsatz in explosionsgefährdeten Bereichen - Teil 5: Schutz durch konstruktive Sicherheit ‚c' /** Non-electrical equipment for use in potentially explosive atmospheres - part 5: Protection by constructional safety 'c' / *Appareils non électriques destinés à être utilisés en atmosphères explosibles - partie 5 : protection par sécurité de construction « c »*
X	**DIN EN ISO 12100-2010**	**Sicherheit von Maschinen - Allgemeine Gestaltungsleitsätze Risikobeurteilung und Risikominderung /** Safety of machinery - General principles for design - Risk assessment and risk reduction / *Sécurité des machines - / Principes généraux pour l'évaluation des risques et la réduction des risques*
X	**DIN EN ISO 13857:2008**	**Sicherheit von Maschinen - Sicherheitsabstände gegen das Erreichen von Gefährdungsbereichen mit den oberen und unteren Gliedmaßen** / Safety of machinery - Safety distances to prevent hazard zones being reached by upper and lower limbs / *Sécurité des machines - Distances de sécurité empêchant les membres supérieurs et inférieurs d'atteindre les zones dangereuses*
X	**DIN EN 1012-2:1996**	**Kompressoren und Vakuumpumpen - Sicherheitsanforderungen - Teil 2: Vakuumpumpen** / Compressors and vacuum pumps - Safety requirements - part 2: Vacuum pumps / *Compresseurs et pompes à vide - Exigences de sécurité - partie 2: pompes à vide*
X	**DIN EN ISO 2151:2008**	**Akustik - Geräuschmessnorm für Kompressoren und Vakuumpumpen - Verfahren der Genauigkeitsklasse 2** / Acoustics - Noise test code for compressors and vacuum pumps – Engineering method (grade 2) / *Acoustique - norme de mesure des émissions pour les compresseurs et les pompes à vide - Procédé de classe de précision 2*
X	**DIN EN 60204-1:2006**	**Sicherheit von Maschinen - Elektrische Ausrüstung von Maschinen - Teil 1: Allgemeine Anforderungen** / Safety of machinery - Electrical equipment of machines - part 1: General requirements / *Sécurité des machines - Equipement électrique des machines - partie 1: Prescriptions générales*
X	**EN 61000-6-2:2005**	**Elektromagnetische Verträglichkeit (EMV) - Teil 6-2: Fachgrundnormen - Störfestigkeit für Industriebereiche** / Electromagnetic compatibility (EMC) - part 6-2: Generic standards - Immunity for industrial environments / *Compatibilité électromagnétique (EMV) - partie 6-2: Normes génériques - Immunité pour les environnements industriels*
X	**EN 61000-6-4:2007**	**Elektromagnetische Verträglichkeit (EMV) - Teil 6-4: Fachgrundnormen - Störaussendung für Industriebereiche** / Electromagnetic compatibility (EMC) - part 6-4: Generic standards - Emission standard for industrial environments environments / *Compatibilité électromagnétique - partie 6-4: Normes génériques - Emissions de parasites pour les activités industrielles*
X	**DIN EN 50110-1**	**Betrieb von elektrischen Anlagen /** Operation of electrical installations / *Fonctionnement des installations électriques*
X	**DIN EN 61010-1**	**Sicherheitsbestimmungen für elektrische Mess-, Steuer-, Regel- und Laborgeräte - Teil 1: Allgemeine Anforderungen** / Safety requirements for electrical equipment for measurement, control and laboratory use - part 1: General requirements / *Consignes de sécurité pour les appareils électriques de mesure, de commande, de régulation ou de laboratoire - partie 1: Prescriptions générales*

Datum / Data		**2016-01-19**
Qualitätsbeauftragter / Quality representative / *Délégué de qualité*	**Name** / Name / *Nom* **Gerd Reinhardt**	
Produktmanager / Product manager / *Directeur de produit*	**Name** / Name / *Nom* **Oliver Fickert**	